PESSOTTO®
Advanced Technology for Beds

TECHNICAL INSTRUCTIONS FOR UPHOSLTERY SET OF COLLAPSIBLE SOFA MOD. ALADINO/ALI

Drawing for thin armrest th. 25 mm

Quantity: 1 pc. left hand
1 pc. right hand

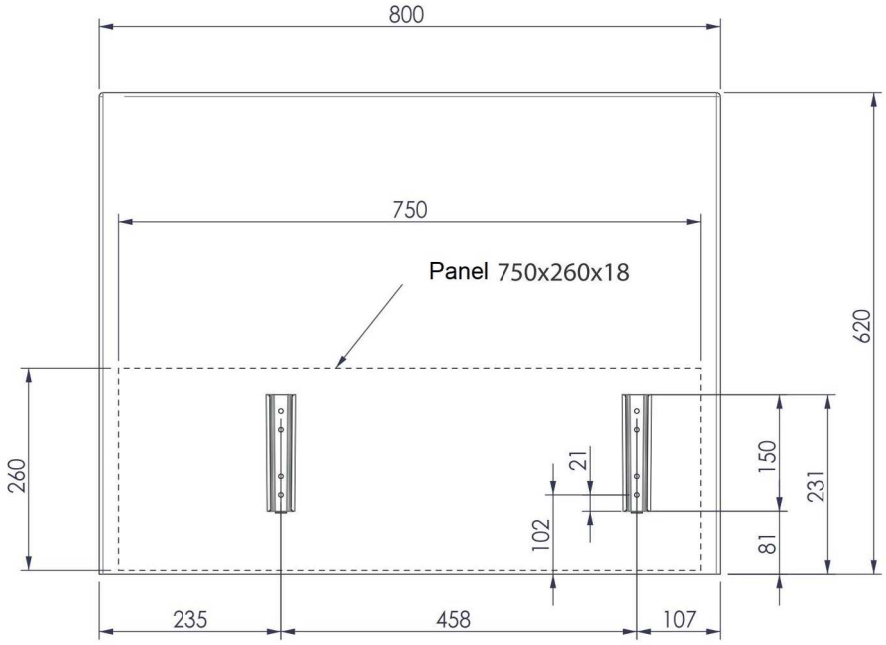

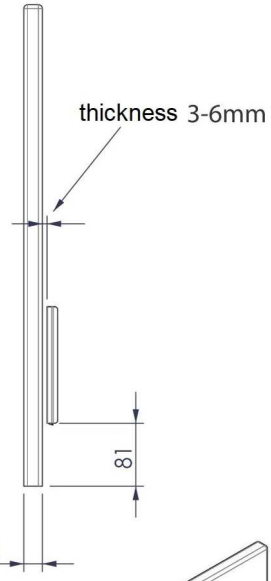

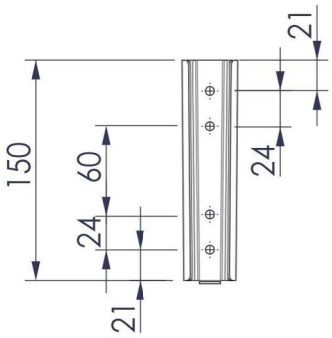

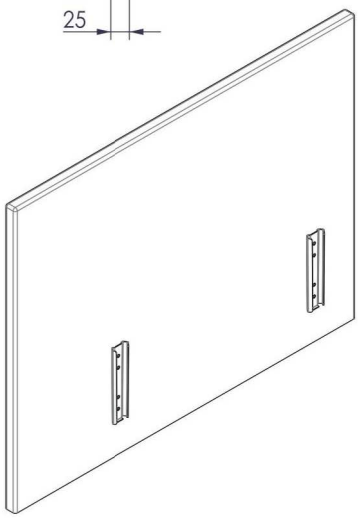

CAUTION! Before starting mass production, a sample must be tested.

1 - Mind: The given dimensions are overall finished dimensions, including the panel + upholstery + fabric cover.
2 - Mind: Made with an upholstered wooden/particle board panel;
3 - Mind: The bayonet glides shall remain externally of the upholstery, fix some 3-6 mm thick shims to adjust the upholstered armrests, in order they do not collide with the front panel once the bed is opened;
4 - Mind: The armrest will be suspended from the floor of about 25 mm

A47-11/07/2022

Pessotto Reti srl
Viale delle Industrie, 36 - Albina di Gaiarine (TV) - Italia
Tel. +39 0434 758734 - Fax +39 0434 758533
info@pessottoreti.com - www.pessottoreti.com